SPECIFICATION

REF. :

PROD. NAME	Shielded SMD Power Inductor	ABC'S DWG NO.	SU1048□□□□F□-□□□		
		REV.	20241118-I	PAGE	1

Ⅰ. Configuration and dimensions：

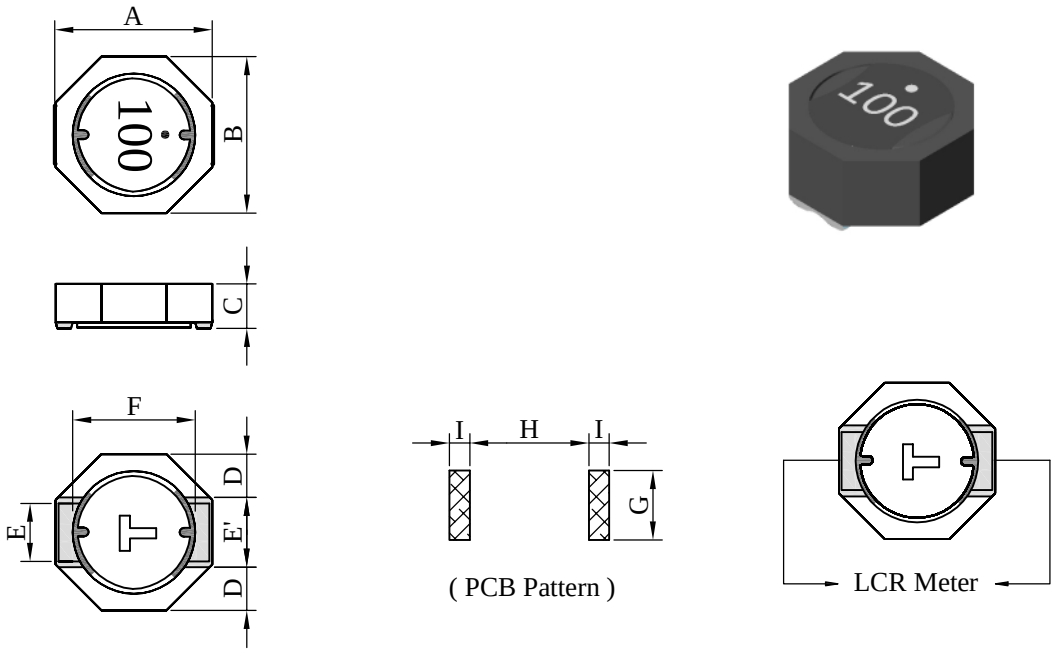

Unit：mm

A	B	C	D	E	E'	F	G	H	I
10.00 ±0.3	10.00 ±0.3	4.80 ±0.3	2.50 typ.	3.20 typ.	5.00 ±0.5	7.40 typ.	4.00 ref.	7.20 ref.	1.80 ref.

Ⅱ. Description：

a. Ferrite drum core construction
b. Magnetically shielded
c. Enamelled copper wire：F class
d. Product weight： 1.63 g（ref.）
e. Moisture sensitivity Level 1
f. Products comply with RoHS' requirements
g. Halogen free

Ⅲ. General specification：

a. Operating temp.：-40℃----+125℃
(Temp. rise included.)
b. Resistance to solder heat：260℃.10 sec.

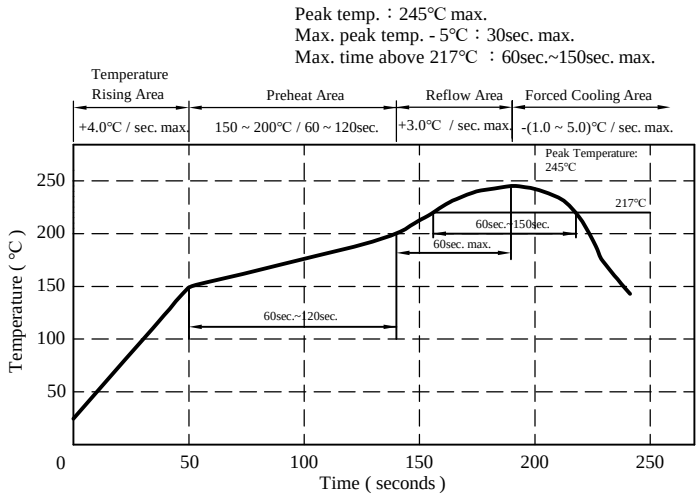

千如電子集團
ABC-ATEC ELECTRONICS GROUP

SPECIFICATION

REF. :

PROD. NAME	Shielded SMD Power Inductor	ABC'S DWG NO.	SU1048□□□□F□-□□□		
		REV.	20241118-I	PAGE	2

IV．Electrical characteristics：

DWG. No.	Inductance (μH)	Q ref.	SRF (MHz) typ.	RDC (mΩ) typ.	RDC (mΩ) max.	Irms (A) max.	Isat (A) typ.
SU1048R80YF□-□□□	0.8 ±30%	8	100	3.6	4.8	7.80	8.50
SU10481R5YF□-□□□	1.5 ±30%	14	70	4.3	5.8	7.00	7.20
SU10482R2YF□-□□□	2.2 ±30%	14	55	5.3	7.2	6.50	6.30
SU10483R0YF□-□□□	3.0 ±30%	14	40	7.2	10.0	6.20	6.00
SU10484R7YF□-□□□	4.7 ±30%	12	30	9.5	12.5	5.50	4.75
SU10486R8YF□-□□□	6.8 ±30%	10	20	13.6	18.0	4.80	4.10
SU10488R2YF□-□□□	8.2 ±30%	8	18	15.0	20.0	4.60	3.80
SU1048100YF□ -□□□	10.0 ±30%	26	16	18.5	25.0	4.50	3.70
SU1048150YF□ -□□□	15.0 ±30%	30	14	29.0	40.0	3.20	2.70
SU1048220YF□ -□□□	22.0 ±30%	22	12	42.0	55.0	2.60	2.00
SU1048330YF□ -□□□	33.0 ±30%	24	10	63.0	84.0	2.10	1.70
SU1048470YF□ -□□□	47.0 ±30%	26	8	94.0	120.0	1.70	1.50
SU1048560YF□ -□□□	56.0 ±30%	26	7	110.0	145.0	1.60	1.40
SU1048680YF□ -□□□	68.0 ±30%	24	6	127.0	170.0	1.40	1.25
SU1048820YF□ -□□□	82.0 ±30%	24	5.5	149.0	200.0	1.30	1.10
SU1048101YF□ -□□□	100.0 ±30%	26	5	160.0	220.0	1.20	1.00
SU1048151YF□ -□□□	150.0 ±30%	24	4.5	235.0	305.0	1.00	0.80
SU1048221YF□ -□□□	220.0 ±30%	20	4	350.0	455.0	0.80	0.70
SU1048331YF□ -□□□	330.0 ±30%	18	3	490.0	640.0	0.65	0.52

1). Electrical specifications at 25℃

2). Inductance Test Freq.：100kHz / 1V

3). Q Test Freq.：R80--25.2MHz , 1R5~8R2--7.96MHz , 100~820--2.52MHz , 101~331--0.796MHz

4). Isat base on △L / L0A=35% typ.

5). Irms base on Temp. rise 30℃ max.

千如電子集團
ABC-ATEC ELECTRONICS GROUP

SPECIFICATION

REF. :

PROD. NAME	Shielded SMD Power Inductor	ABC'S DWG NO.	SU1048□□□□F□-□□□		
		REV.	20241118-I	PAGE	3

V．Curve：

SU10482R2YF□

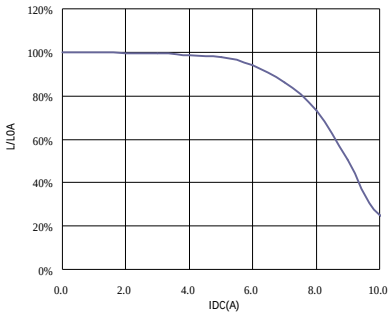

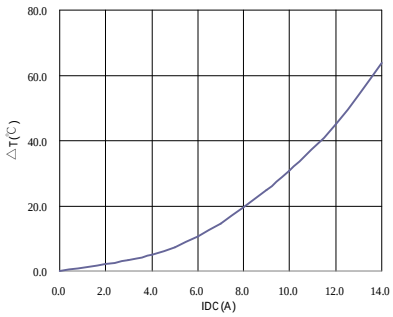

SU1048330YF□

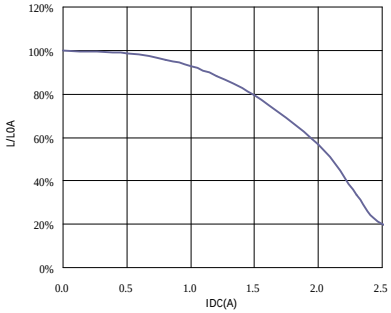

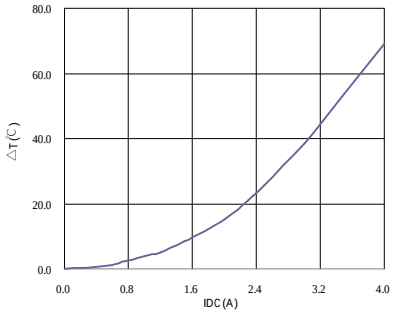

SU1048101YF□

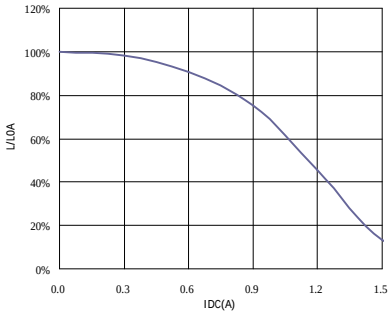

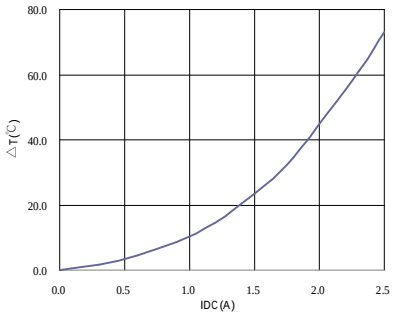

SU1048331YF□

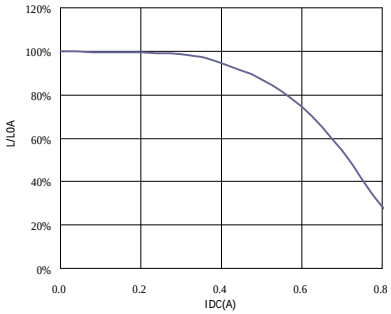

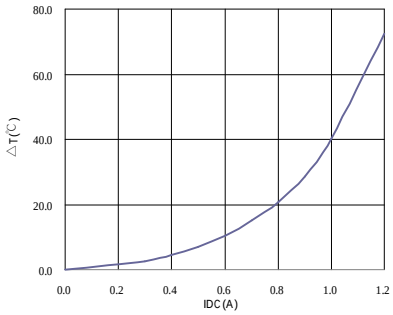

千如電子集團
ABC-ATEC ELECTRONICS GROUP

SPECIFICATION

REF. :

PROD. NAME	Shielded SMD Power Inductor	ABC'S DWG NO.	SU1048□□□□F□-□□□		
		REV.	20241118-I	PAGE	4

VI．Packaging information：

(1) Configuration

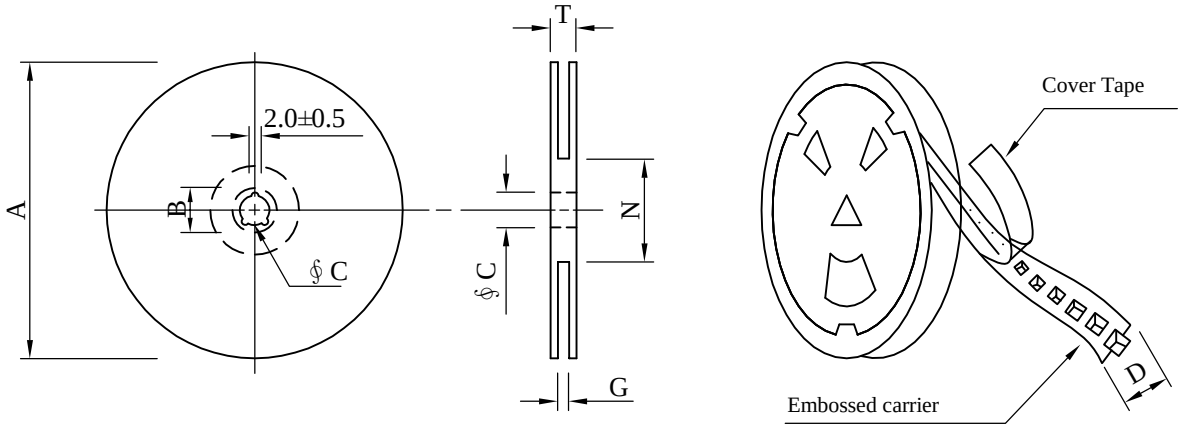

※Carrier tape width : D

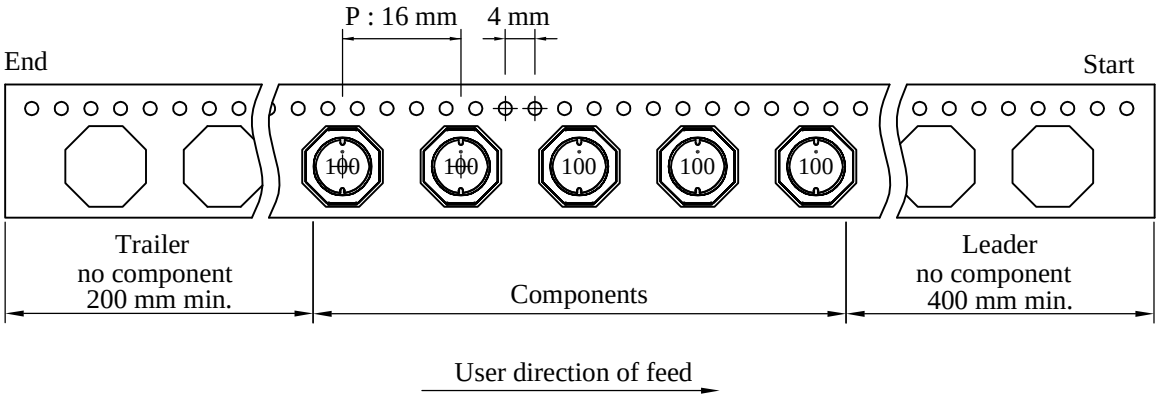

(2) Dimensions

Unit:mm

Style	A	B	C	D	G	N	T
13 - 24	330	21±0.8	13±0.5	24	26^{+0}	60^{-0}	30.4

(3) Q'TY & G.W. Per package

Code	Inner : Reel			Outer : Carton		
	Q'TY (pcs)	G.W. (g)	Style	Q'TY (pcs)	G.W. (kg)	Size (cm)
B	600	1330	13 - 24	2,400	6.6	38 x 37 x 22

千如電子集團
ABC-ATEC ELECTRONICS GROUP

SPECIFICATION

REF. :

PROD. NAME	Shielded SMD Power Inductor	ABC'S DWG NO.	SU1048□□□□F□-□□□		
		REV.	20241118-I	PAGE	5

VII．Drawing number expression：

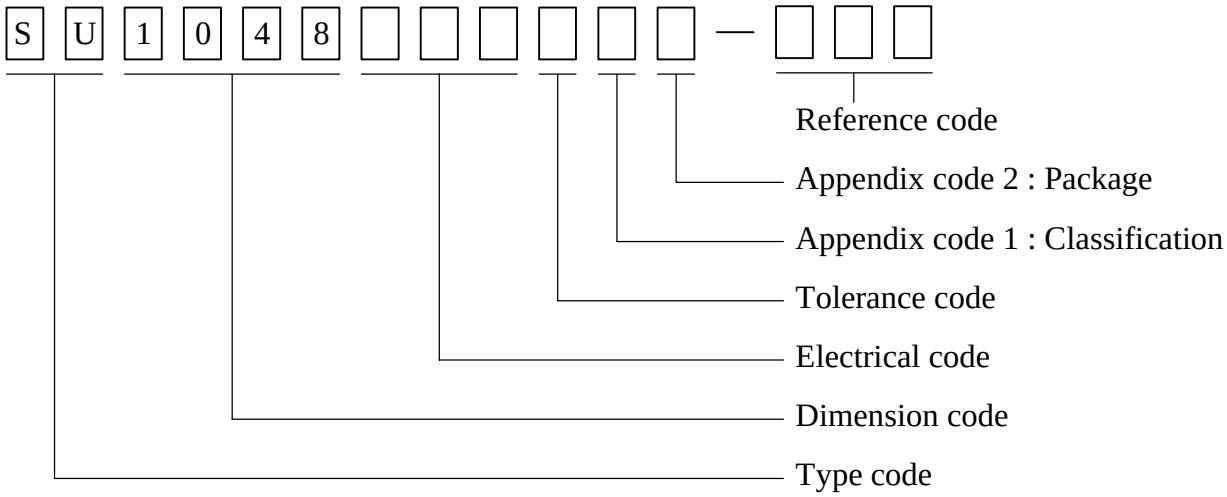

Appendix code 1：Product Classification

Appendix code 2：Package Information

Code	Inner package	Cover tape	Carrier tape	Bag	Package Q'TY	Remark
B	T /R (Reel package)	UCT	Antistatic	Antistatic	600 pcs	

千如電子集團
ABC-ATEC ELECTRONICS GROUP

SPECIFICATION

REF. :

PROD. NAME	Shielded SMD Power Inductor	ABC'S DWG NO.	SU1048□□□□F□-□□□		
		REV.	20241118-I	PAGE	6

VIII．Reliability test：

Item	Reference documents	Test Condition	Test Specification
1.High Temperature Exposure	MIL-STD-202 Method 108	1.Temperature: 125±2℃ 2.Time:96±2 hours.	1.No mechanical or electrical damage. 2.Inductance shall not change more than ±20%.
2.Temperature Cycling	JESD22-A 104	1.Temperature: -40℃ ~ +125℃ 2.Number of cycle:100 cycles 3.Dwell time:30 minutes	1.No mechanical or electrical damage. 2.Inductance shall not change more than ±20%.
3.Biased Humidity Test	MIL-STD-202 Method 103	1.Temperature：85±2 ℃ 2.Humidity: 85% RH. 3.Time:96±2 Hours	1.No mechanical or electrical damage. 2.Inductance shall not change more than ±20%.
4.Operational Life	JESD22-A 108	1.Temperature: 125℃(Temp. rise included) 2.Time:96±2 hours. 3.Rated current	1.No mechanical or electrical damage. 2.Inductance shall not change more than ±20%.
5.External Visual	JESD22-B 101 & MIL-STD-883 Method 2009	Inspect product constructions, marking and workmanship.	1.No pollution on the surface of products. 2.Clear marking. 3.No crack.
6.Physical Dimensions	JESD22-B 100	Verify physical dimensions to the applicable product detail specification.	Per product specification standard
7.Resistance to solvents	MIL-STD-202 Method 215	Immerse into solvent for 3±0.5 minutes & brush 10 times for 3 cycles.	1.No body change in apperarance. 2.No marking blurred. 3.Inductance shall not change more than ±20%.
8.Vibration Test	MIL-STD-202 Method 204	1.Frequency and Amplitued :10-2000-10 Hz 2.Sweep time：20 min 3.Acceleration：5g 4.Direction：X , Y , Z 5.Number of sweep：6 time/axis	1.No mechanical or electrical damage. 2.Inductance shall not change more than ±20%.
9.Resistance To Soldering Heat Test	MIL-STD-202 Method 210 & J-STD020	1.Highest temperature：245±5℃ 2.Time（temp.≧ 217℃）：60~150 Seconds. 3.Reflow times：3 times.	1.No mechanical or electrical damage. 2.Inductance shall not change more than ±20%.
10.Saturation Current	JIS C 6436 & User SPEC.	1.Applied rated current for 5 seconds. 2.Saturation current	Inductance shall not drop more than 30% typ.
11.Over load	JIS C 6436 & User SPEC.	1.Applied one and half rated current for a period of 5 minutes. 2.Rated current	No electrical or mechanical damage
12.Temperature Rise Current	JIS C 6436 & User SPEC.	1.Applied rated current for 10 minutes. 2.Temperature measure by digital surface thermometer. 3.Irms current	Surface temperature rise is less than 30℃max.
13.Solderability Test	J-STD-002 & JESD22-B 102	1.Baking in pre-testing：150±5℃ / 16Hours±30 min. 2.Peak temperature：240±5℃ 3.Time（temp.≧217℃）：60~150 seconds. 4.Reflow times：1 time.	More than 95% soldering coverage min on terminations.
14.Electrical Characteriazation	MIL-STD-202 Method 304 & User SPEC.	1.Operating temperature：-40℃~125℃ 2.Room temperature：25℃.	1.No mechanical or electrical damage. 2.Inductance shall not change more than ±20%.
15.Drop	CNS-C6354 & GB/T 2423.8	1.Products shall be mounted on SPEC. PCB and dropped down from a height of 1m 2.Drop total time：6 times (Every side of sample drop 2 times)	1. Adhesion on PCB shall be enough. 2. Product appearance shall not break. 3. No electrical damage.
16.Terminal Strength Test	IEC 60068-2-21	1.Apply push force to samples mounted on PCB. 2.Force of 1.8 kg for 60±1 seconds.	After test, inductors shall be no mechanical damage.

千如電子集團
ABC-ATEC ELECTRONICS GROUP

SPECIFICATION

REF. :

IX．Safety notes：

1. The risks of using the product are highly relevant to the field of application and need to be evaluated by both user and manufacturer. If the product is used for a purpose that directly affects personal safety or will cause significant impact or loss to the society , please be sure to contact us first for confirmation.
   產品使用的風險與應用領域有高度相關，若您應用於直接影響人身安全系統或對社會會造成重大影響與損失之相關用途，請務必優先與我們聯繫確認。
2. The storage period is less than 12 months. Ensure to follow the storage conditions (Temperature: 5 to 30°C, Humidity: 10 to 60% RH or less). If the storage time is exceeded the limit, the electrodes might be deteriorate of terminal soldering.
   儲存期不超過12個月,務必遵守儲存條件（溫度：5至30℃，濕度：10至60％RH以下）。如果超過了儲存時間，端子電極可能會氧化而影響焊接。
3. Do not use or store in locations where there are conditions such as gas corrosion (salt, acid, alkali, etc.).
   不要在有氣體腐蝕等條件的地方使用或存放（鹽，酸，鹼等）。
4. Soldering corrections after mounting should be within the range of the conditions determined in the specifications. If overheated, a short circuit, performance deterioration, or lifespan shortening may occur.
   安裝時的焊接條件應在規格範圍內。如果超過要求，可能會發生短路，性能下降或壽命縮短。
5. When using, it should try to avoid excessive mechanical impact on the product, such as collision / drop ... and other reasons.
   使用時，應盡量避免產品受到過度機械衝擊，如碰撞/掉落...等原因。
6. When embedding a printed circuit board where a chip is mounted to a set, be sure that residual stress is not given to the chip due to the overall distortion of the printed circuit board and partial distortion such as at screw tightening portions.
   將已安裝新片的電路板組裝到裝置時，請注意應盡量避免電路板受到組裝變形...等，導致產品受到應力。
7. Self heating (temperature increase) occurs when the power is turned ON, so the tolerance should be sufficient for the set thermal design.
   產品會因通電而自我發熱(溫度上升)，因此在熱影響設計方面，需保留適當公差。
8. Do not expose the products to magnets or magnetic fields.
   請勿將產品暴露於磁鐵或是磁場中。
9. If you would like to use this products to performance and/or quality require a more stringent level of safety or reliability, or whose failure, malfunction or trouble could cause serious damage to society, person or property, or if you have special requirements exceeding the range or conditions set forth in the each catalog, please contact us.
   如果您希望將此產品用於性能和/或質量要求更嚴格的安全性或可靠性，或其失敗、故障或麻煩可能對社會、個人或財產造成嚴重損害，或者您有特殊情況要求超出目錄中規定的範圍或條件，請與我們聯繫。